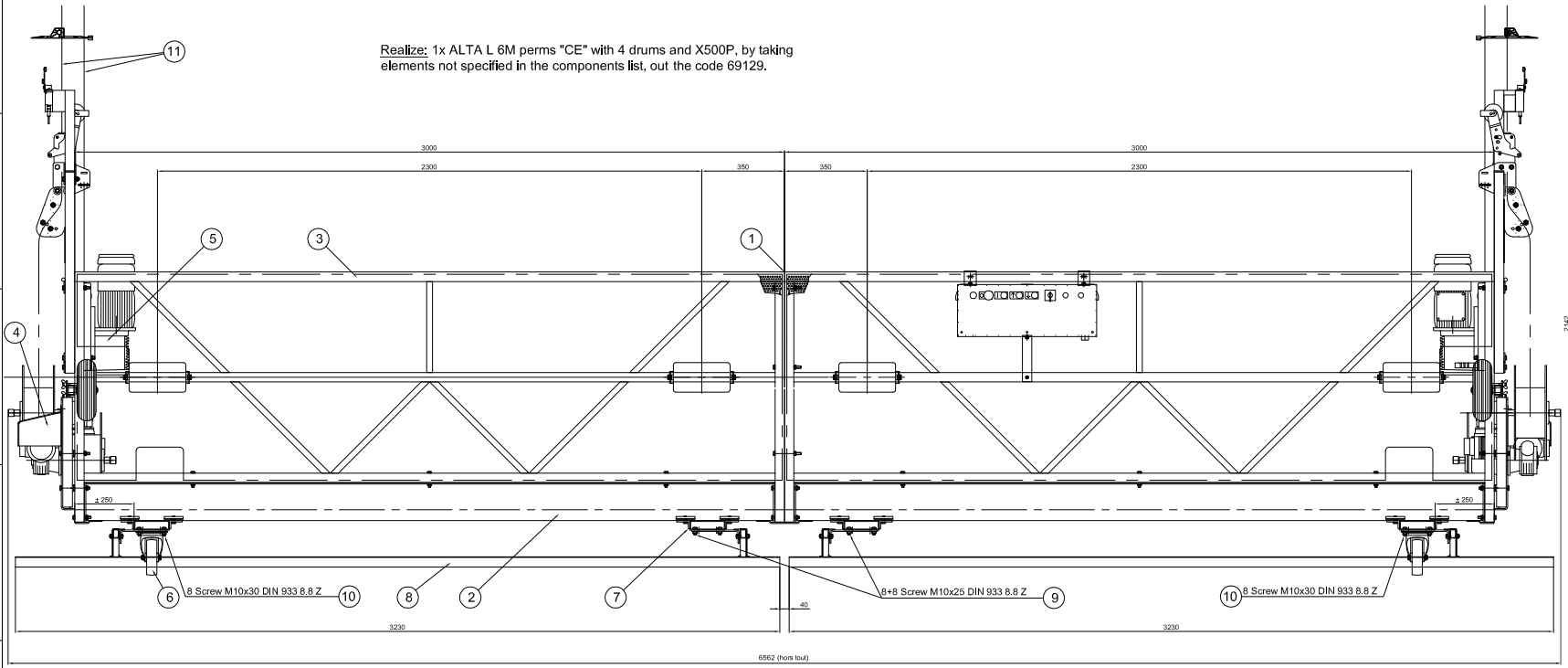

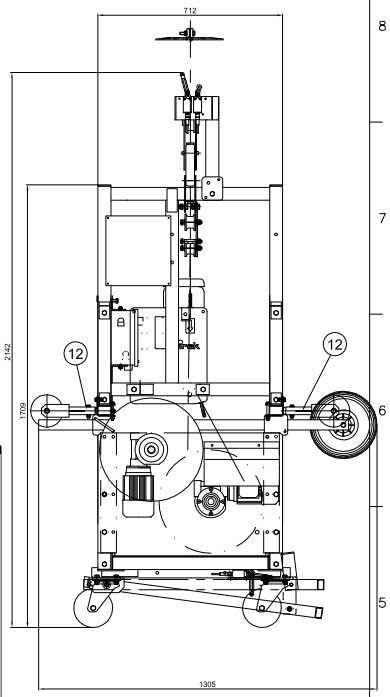

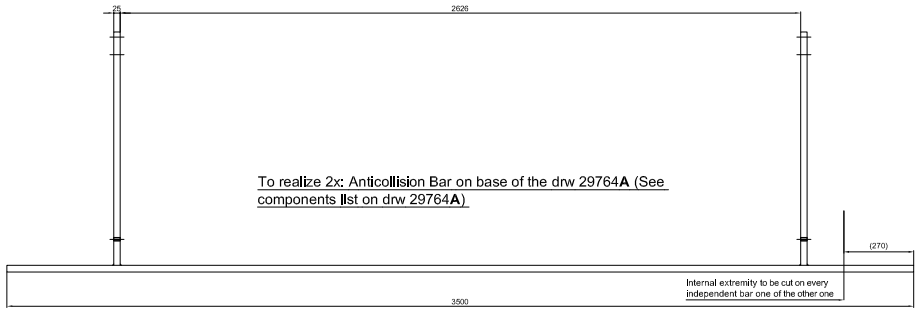

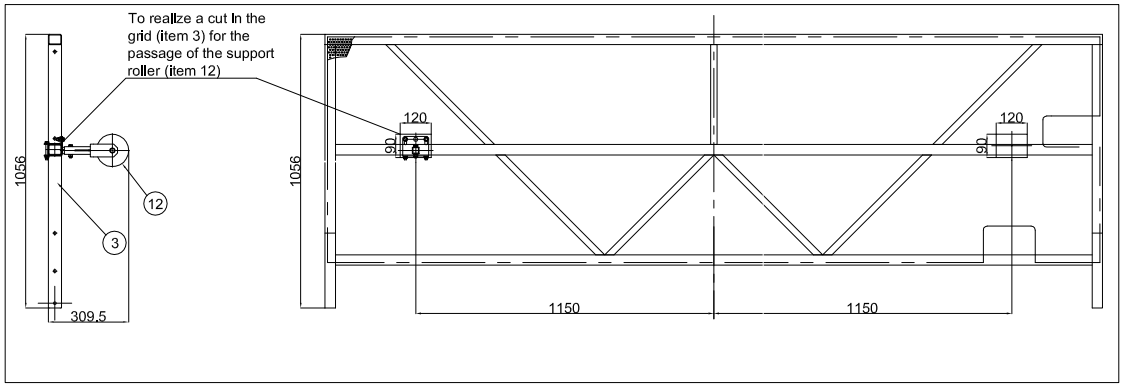

Item	Nbr	Description	Length	Material	Code SSA	Remark
12	8	Subset roller foams (see drw 13103)	60	.	.	.
11	4	Cable-E 8 Lg. 50m with hook	50	.	7058	.
10	16	ScrewTH M10 x 30 DIN 933 8.8 Z	30	.	.	.
9	16	Screw TH M10 x 25 DIN 933 8.8 Z	25	.	.	.
8	2	Bar Anti-collision Length. 3000 to cut follow drw	.	.	"9688" with old draw 29764A	
7	4	Support wheels Piv. Ø150 under ALTA L	.	.	13078	remove 4 wheels
6	4	Wheel Piv. D150	.	.	26036	.
5	2	Winch X-500P C8 8,5m/min	.	.	.	.
4	2	Kit (2) reelers D.400 tree phases	.	.	35068	.
3	4	Barrier ALTA L Lg. 3m with grid	.	.	26237	.
2	2	Floor ALTA L 3m	.	.	20217	.
1	1	Cradle Alta-L 6M- 2 Stirrup ends			11868	.

REV.	DATE	MODIFICATION	BY
.	.	.	.
A	20/08/09	CREATION	VM

"© SECALT SA 2009-COPYING, REPRODUCTION SCANNING AS A WHOLE OR PARTLY AS WELL AS FORWARDING TO THIRD PARTIES IS PROHIBITED WITHOUT THE PRIOR WRITTEN AGREEMENT OF SECALT S.A. USE OF SUCH MATERIAL IS A VIOLATION OF APPLICABLE COPYRIGHT LAW. THE NON AUTHORIZED USER MAY BE LIABLE FOR DAMAGES OR OTHER REMEDIES."

REMARKS:
Unless otherwise specified
GENERAL:
All dimensions are in millimeters
General tolerances: ISO 2768 mK
ISO 13920 BG

WELDMENT:
Symbol representation: ISO 2553
Quality for inspection Level C: ISO 5817
NF EN 30042
Unspecified weld fillet ø= . continuous
Check: EN 970
Check by penetrant testing: ISO 3452

PROTECTION:
- Hot dip galvanized ISO 1461
- Zinc electroplated ISO 2081
- Chromate Zinc electropl. ISO 4520
- Zinc thermal-sprayed ISO 12944-4 ISO 2063

PROJECT: Regione Lombardia

Secalt S.A. LUXEMBOURG

TITLE: ALTA L 6M permanente "CE"

© Copyright Reserved

SCALE: 1:10 SIZE: A1

MATERIAL: .

DRAWING NO: 090737A30 REVISION: A